L-shape range

- L-shape bearings only to be used in compression. For hanging conditions please contact SKF.
- **Steel** : high quality steel, XC 45 improved
- **Lubrication** : L'Shape slewing bearings are pre-lubricated with a lithium soap, EP additives and a consistency of 2
- **Bolting class** : 10.9 recommended
- **Grease nipples** : four equally grease nipples (M8X1.00) (G)
- **High quality raceways hardening**

L'Shape slewing bearings with special holes or without holes for attachment bolts : please contact your SKF representative

- **Mounting and Maintenance** : see SKF Technical Information 202

AXIAL CLEARANCE UNDER LOAD

average diameter	reference load	maximum deflection (average measurement on 3 points)	maximum measurement on 1 point
mm	N	mm	mm
411	200	0,30	0,40
541	200	0,30	0,40
641	250	0,35	0,45
741	300	0,35	0,45
841	300	0,40	0,50
941	400	0,45	0,55
1091	400	0,50	0,60

Tolerances for the outside and inside diameter

Series	Di	Tolerance	De	Tolerance
0411	304	+/- 0.20	518	+0 ; -0.40
0541	434	+/- 0.20	648	+0 ; -0.40
0641	534	+/- 0.25	748	+0 ; -0.50
0741	634	+/- 0.25	848	+0 ; -0.50
0841	734	+/- 0.25	948	+0 ; -0.80
0941	834	+/- 0.30	1048	+0 ; -0.80
1091	934	+/- 0.30	1198	+0 ; -0.80

L'shape range
External gear

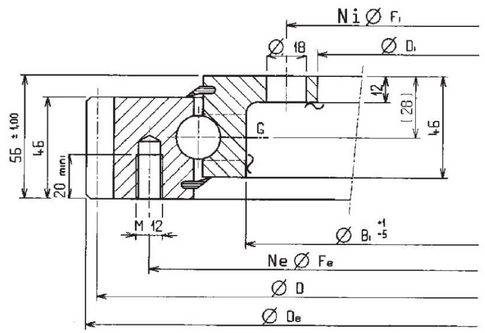

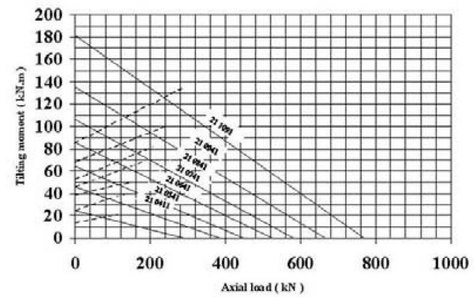

Main dimensions			Fixing holes				Gear teeth			Permissible tangential load maxi	Mass	Designation
De	Di	Bi	Fe	Ne	Fi	Ni	m	z	D			
mm	mm	mm	mm		mm				mm	Kn	kg	
505	304	368	455	10	332	12	5	99	495	33,8	32	**RKS.21 0411**
640	434	498	585	14	462	14	6	105	630	41	44	**RKS.21 0541**
742	534	598	685	15	562	16	6	122	732	41	52	**RKS.21 0641**
840	634	698	785	18	662	16	6	138	828	41	60	**RKS.21 0741**
950	734	798	885	18	762	18	8	117	936	55	68	**RKS.21 0841**
1046	834	898	985	20	862	20	8	129	1032	55	76	**RKS.21 0941**
1198	984	1048	1135	22	1012	20	8	148	1184	55	86	**RKS.21 1091**

Luoyang Jiecheng Bearing Technology Co., Ltd