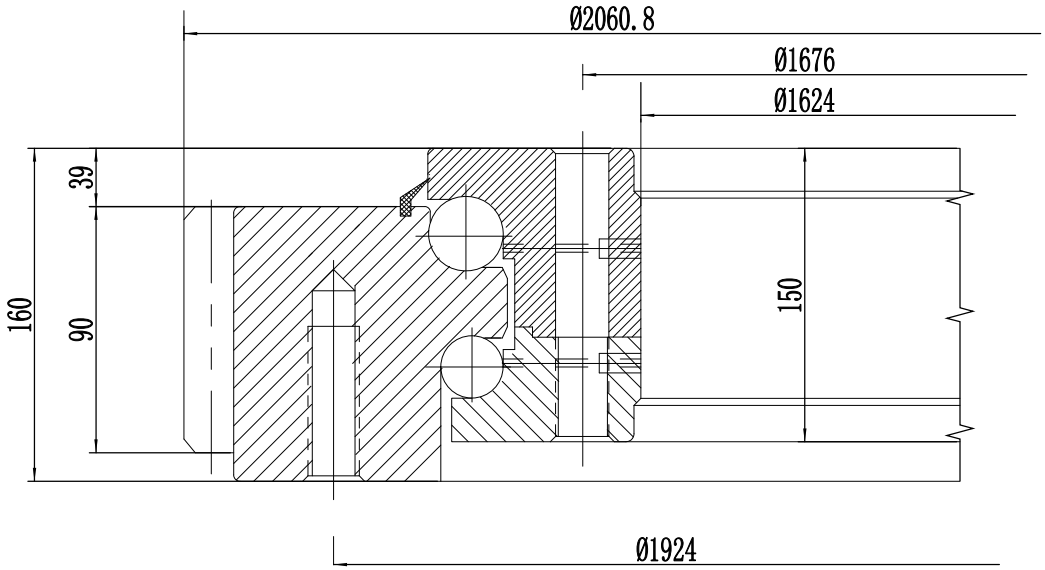

1 Axial clearance:min , max ;

2 After assembled C side make mark : and manufacture No.

Remark:

1. Luoyang Jiecheng Bearing Technology Co., Ltd is a technical Inc, specialize in designing and manufacturing slewing ring bearing, we can design and manufactur all kinds of slewing bearing according to client's requirement.
2. This drawing is reference for user, if you need formal drawing, please contact wth us sales@jcb-bearing.com, the official drawing will be submitted after order confirmation.

Contact information
Company Address : D1805, No.3 Lianmeng road, Luoyang, Henan, China.
Postal code : 471003
Phone : 86-379-68611678 Fax : 86-379-68611679
Msn: jcb-bearing@hotmail.com Skype: jcb-bearing
E-mail: sales@jcb-bearing.com
Reserved E-mail: jcb.bearing@gmail.com
Website: www.jcb-bearing.com

No.	Items	Qty	Material
09	Bolt		Steel 35-GB/T699
48	Seal		I-3 Oil-resisting rubber
26	second cage		Nylon 1010-HG2-869
06	cage		Nylon 1010-HG2-869
24	second ball		Steel GCr15-GB/T18254
04	ball		Steel GCr15-GB/T18254
02	outer ring		Steel 42CrMo-GB/T3077
21	second inner ring		Steel 42CrMo-GB/T3077
01	inner ring		Steel 42CrMo-GB/T3077

Double Row Different Diameter Ball Slewing Bearing

022.40.1800

weight(kg)

S

Total 4 page page 1